OS Friendly Microprocessor Architecture

INTRODUCTION

Prior Art processors and microprocessors have not tried to balance hardware performance and OS performance at the same time. By taking into consideration the costs and benefits of implementing functions in hardware and in the operating system at the same time, this leads to optimizations resulting in a higher performance operating system, and low power requirements. The cost is a modest increase in hardware complexity.

CONCEPT

The present invention is a microprocessor architecture for efficiently running an operating system. The improved architecture provides higher performance, improved operating system efficiency, enhanced security, and reduced power consumption.

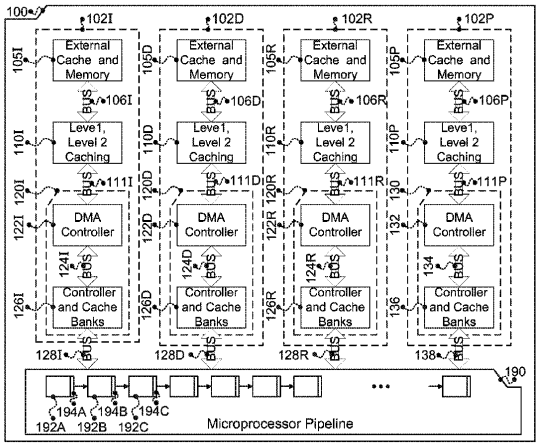

INVENTION OVERVIEW

The present microprocessor architecture 100 invention parallelizes the operations typically used in software by an operating system to significantly improve the performance of an operating system context switch. A second benefit of the new architecture is hardware based information assurance.

- Provides higher performance.
- Improved operating system efficiency
- Enhanced security
- Reduced power consumption.
- U.S. Patent Number: 9,122,610 B2
- Application Number: 14/029,053
- Date of Patent: 1 Sep 2015

POTENTIAL MARKET

- Microprocessors and computer hardware industries

BUSINESS WITH AMRDEC

AMRDEC is a leader in partnering with domestic firms. Successfully developed and implemented innovative tools to ease the technology transfer process such as:

- Patent License Agreements
- Cooperative Research and Development Agreements
- Test Services Agreements

CONTACT INFORMATION

If you would like more information about this technology or about AMRDEC's technology program, contact:

U.S. Army Aviation and Missile Research, Development, and Engineering Center
ATTN: RDMR-CST
Office of Research and Technology Applications
5400 Fowler Road
Redstone Arsenal, AL 35898

Phone: 256-876-8743 or 256-313-0895
E-mail: ORTA@amrdec.army.mil

Distribution A. Approved for public release; distribution is unlimited: PR1295.